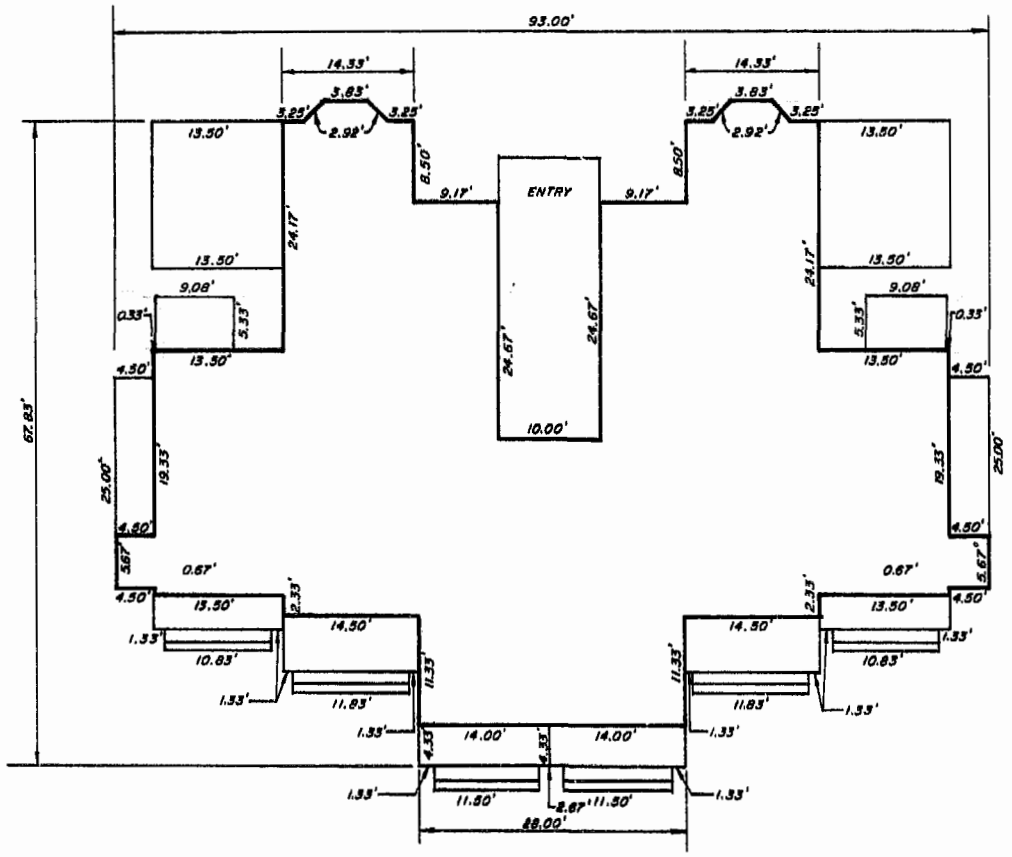

REPRESENTS BUILDINGS 4,5

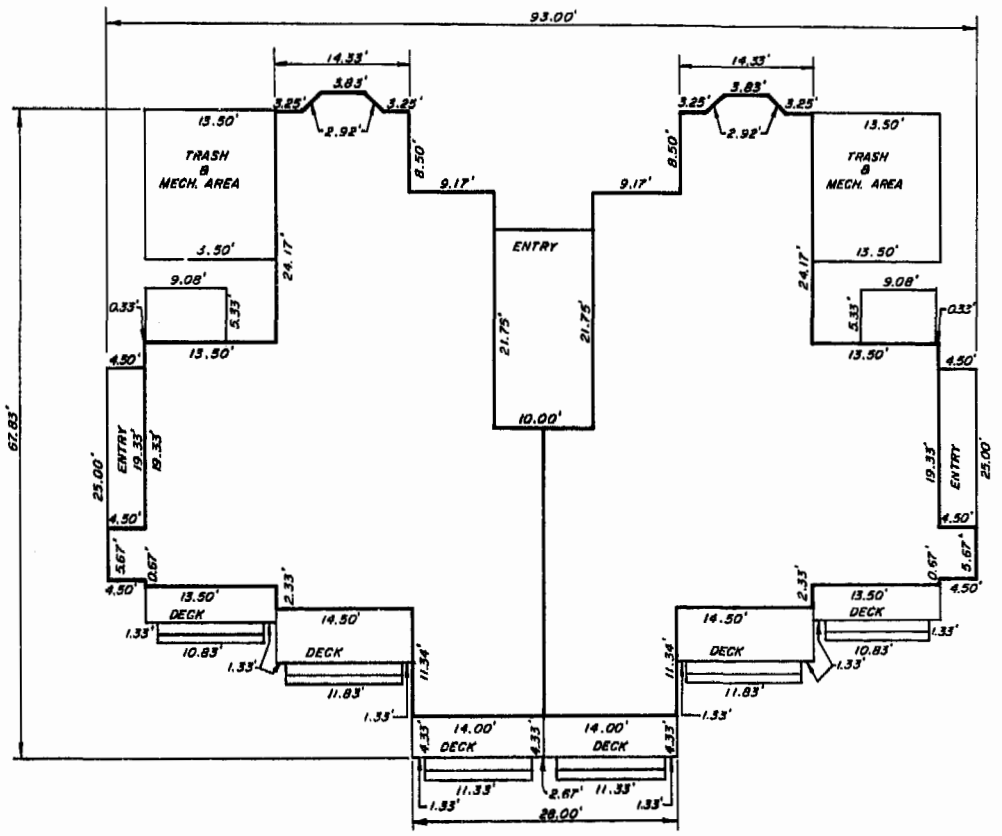

REPRESENTS BUILDINGS 6,7

EXHIBIT A-2
CONFERENCE CENTER CONDOMINIUM
PHASE 2A
BEING A SUBDIVISION OF PROPERTY OF
BUSCH PROPERTIES, INC.
KINGSMILL ON THE JAMES
JAMES CITY COUNTY, VIRGINIA
DATE: 5/07/90
Langley and McDonald, P.C.
VIRGINIA BEACH AND WILLIAMSBURG, VIRGINIA
Bainbridge and Associates
ARCHITECTS

COMMONWEALTH OF VIRGINIA
FREDERICK BAINBRIDGE
CERTIFICATE NO. 03346
CERTIFIED ARCHITECT

SHEET 2 OF 16

LOGAN SYSTEMS 1 2 3

CWG 3672 W